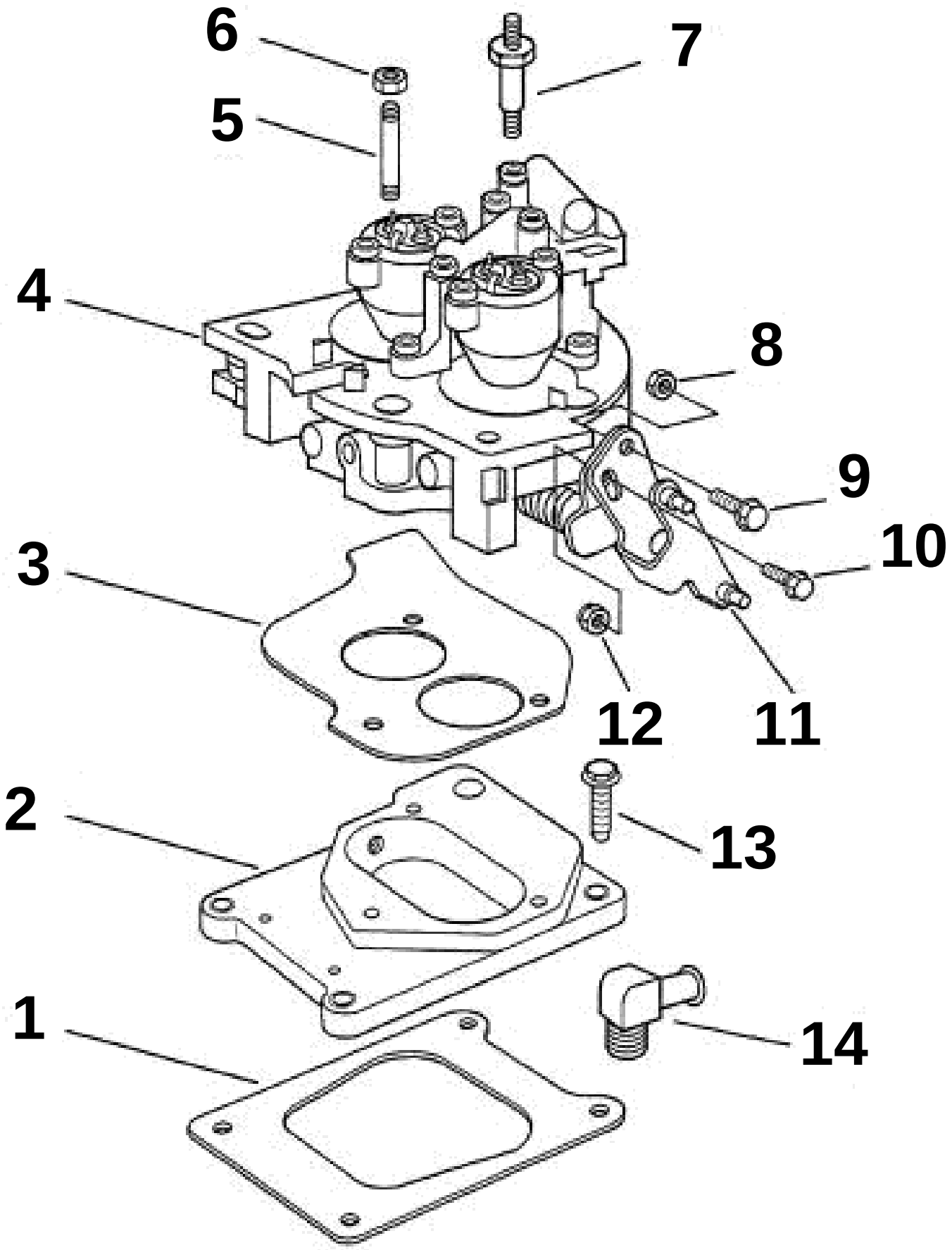
6
7
5
4
8
9
10
3
12
11
2
13
1
14

THROTTLE BODY INJECTION

REF	PART NO.	QTY	DESCRIPTION
1	3850405	1	Gasket, Adapter to intake
2	3850039	1	Adapter
	3850740	1	· Plug
3	3850355	1	Gasket, TBI to adapter
4	3850354	1	Throttle body
5	3852160	3	Stud, TBI to adapter
6	3852142	3	Nut, Stud, TBI to adapter
7	3850274	1	Stud, Flame arrestor
8	3852009	1	Nut, Lever & pin to TBI
9	3853428	1	Screw, Lever & pin to TBI
10	3850411	1	Screw, Lever & pin to TBI
11	3856211	1	Lever, Throttle
12	3852420	1	Lock nut, Lever & pin to TBI
13	3852008	4	Screw, Adapter to intake
14	3853598	1	Riser, PCV hose to adapter
	3856766	1	Nipple, TBI nipple, front